ROYAL THEATRE – LETTER-SIZE PDF DRAWINGS

This document contains an assortment of drawings of the Royal Theatre, formatted to print on letter-sized paper (either 8.5”x11” or ISO A4). They are intended to be a convenient alternative to the theatre’s CAD files and large-format PDF drawings.

Please refer to the theatre’s ‘Technical Specifications’ document and/or CAD drawings for detailed dimensions. Scaling off these drawings is not recommended.

Complete technical information, including CAD and PDF drawings, is available at:
http://www.rmts.bc.ca/rental-information/royal-theatre-technical-info
The documents on this webpage (including this one) are updated from time to time, so please check to make sure you have the most current versions.

Last updated: 09 May 2020

TABLE OF CONTENTS

TITLE	DESCRIPTION
Stage/Auditorium Plan	Plan view of the stage and auditorium 01
Stage/Auditorium Section	Section view of the stage and auditorium 02
House Masking	Plan view of the stage, with house masking hang 03
Orchestra Shell Towers	Details, dimensions, and normal storage configuration 04
Orchestra Pit	Details and dimensions of two configurations 05
House Dance Floor	House dance floor and masking, and suggested T-line 06
Stage / Masking / T-line	Basic drawing of playing space only, for SM script 07
Ground Floor Plan	Plan view of the entire building 21
West Lobby	Plan view of the west lobby 22
East Lobby	Plan view of the east lobby and patio 23
Loading – Site	Plan view of entire loading area/building/streets 31
Loading – Plan	Plan view of loading area and stage 32
Loading – Section	Section view of loading area and stage 33
Dressing Rooms	Located one level below the stage 41
Catering set-up	Suggested configuration for green room hospitality 42

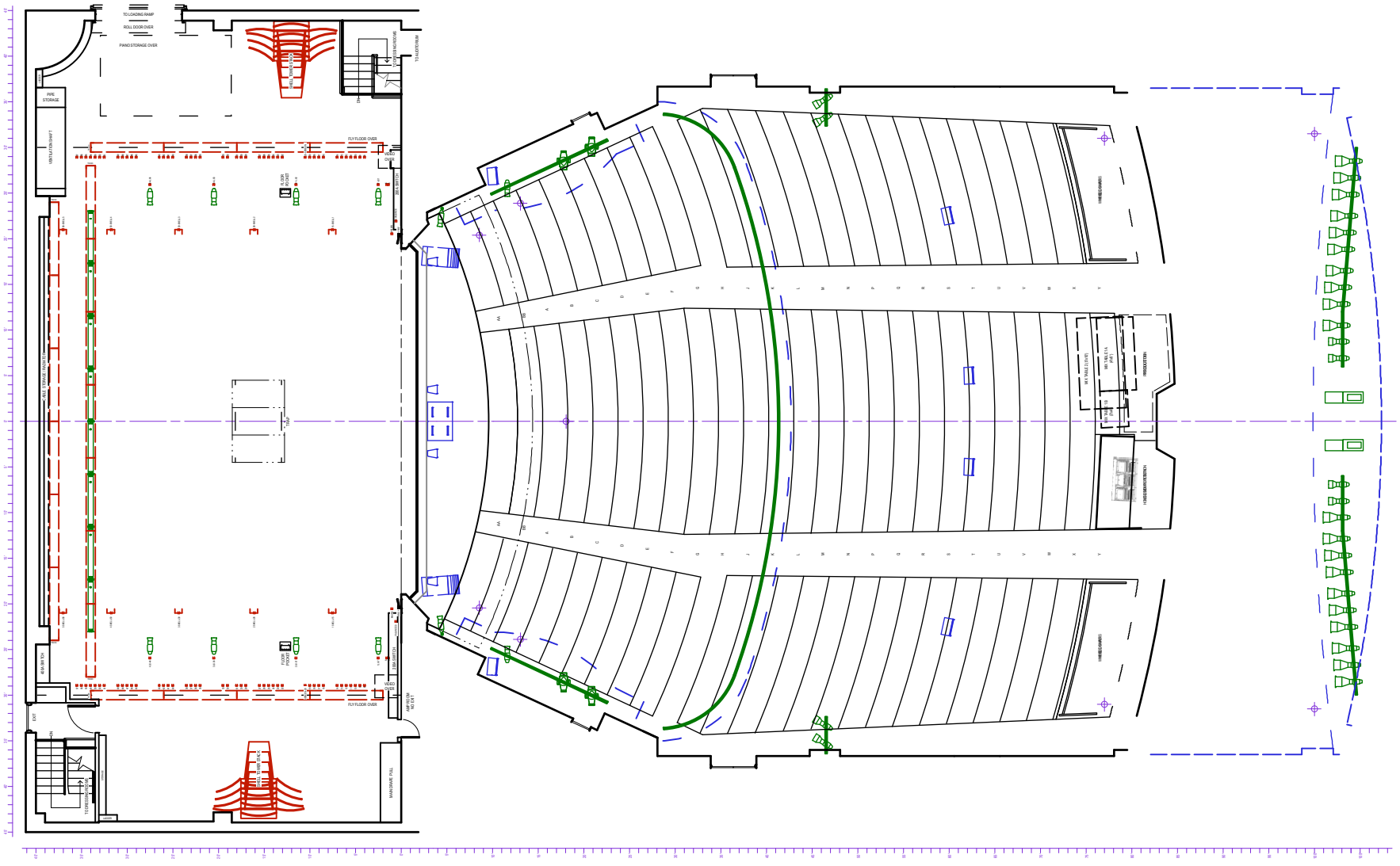

NOTES:

FOR HIGHER RESOLUTION, DOWNLOAD THE SEPARATE PDF PLAN/SECTION DRAWING, WHICH IS AT 1/4"=1' SCALE

VENUE:	ROYAL THEATRE, VICTORIA BC
CONTACT:	https://www.rmts.bc.ca 250-361-0800
DRAWING NO.	R-LTR-01
REVISION DATE:	2020-05-10
DRAWN BY:	TH
PAPER SIZE:	ANSI A (LETTER), A4
SCALE:	1:200

the ROYAL & McPHERSON theatres society

DESCRIPTION:

ROYAL THEATRE
STAGE AND AUDITORIUM
PLAN VIEW

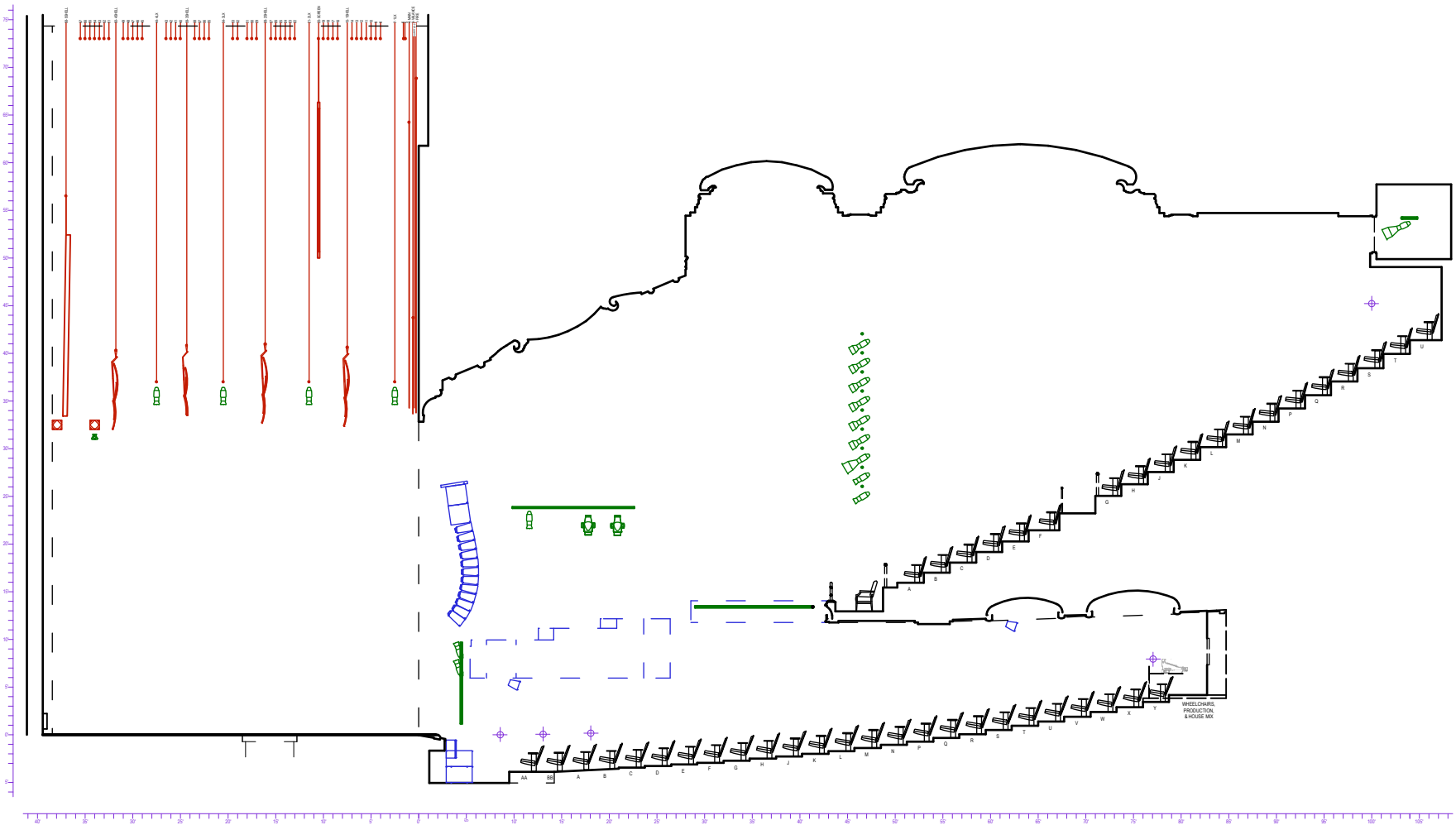

NOTES:

FOR HIGHER RESOLUTION, DOWNLOAD THE SEPARATE PDF PLAN/SECTION DRAWING, WHICH IS AT 1/4"=1' SCALE

VENUE:	ROYAL THEATRE, VICTORIA BC
CONTACT:	https://www.rmts.bc.ca 250-361-0800
DRAWING NO.	R-LTR-02
REVISION DATE:	2020-01-10
DRAWN BY:	TH
PAPER SIZE:	ANSI A (LETTER), A4
SCALE:	1:200

the ROYAL & McPHERSON theatres society

DESCRIPTION:

ROYAL THEATRE STAGE AND AUDITORIUM SECTION VIEW

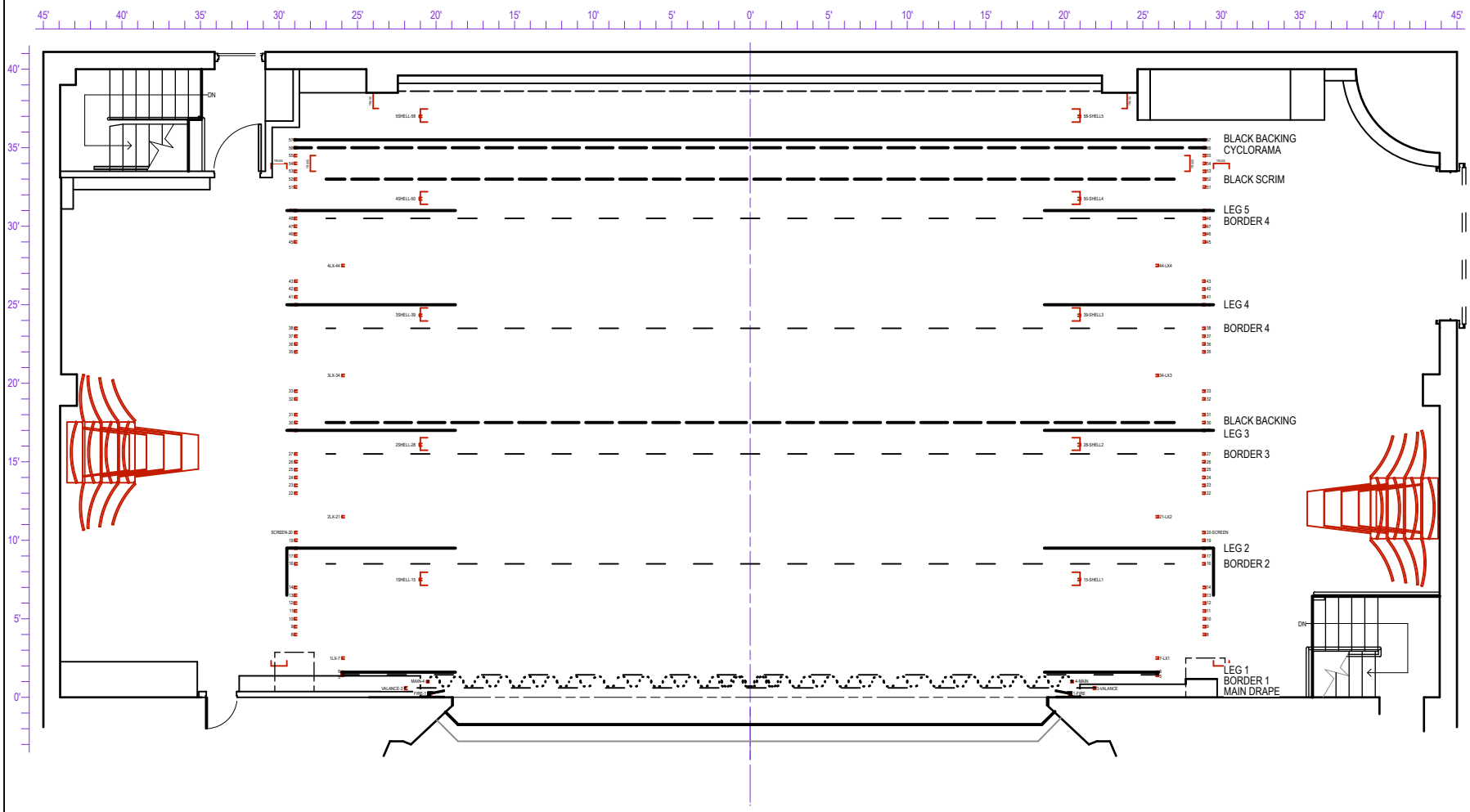

NOTES:

HOUSE LEG OPENING: 37'-6"

HOUSE BORDER TRIM: 23'-0"

VENUE:	ROYAL THEATRE, VICTORIA BC		
CONTACT:	https://www.rmts.bc.ca	250-361-0800	
DRAWING NO.	R-LTR-03	REVISION DATE: 2020-05-10	DRAWN BY: TH
PAPER SIZE:	ANSI A (LETTER), A4	SCALE:	1" = 10'

the ROYAL & McPHERSON theatres society

DESCRIPTION:

ROYAL THEATRE
STAGE PLAN
HOUSE MASKING

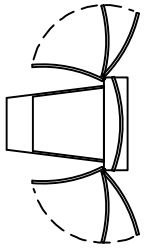

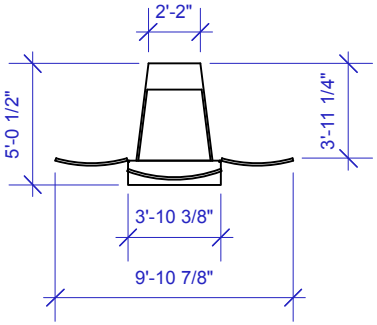

SINGLE - SIDE

SINGLE - FRONT

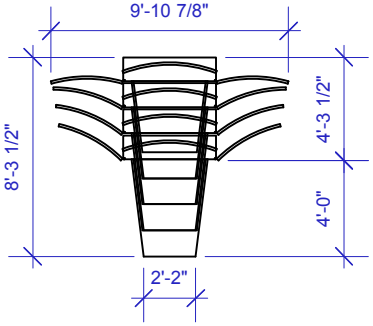

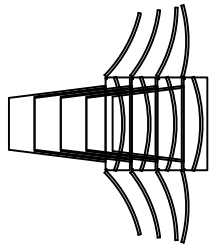

STACK OF 4 - REAR

STACK OF 4 - SIDE

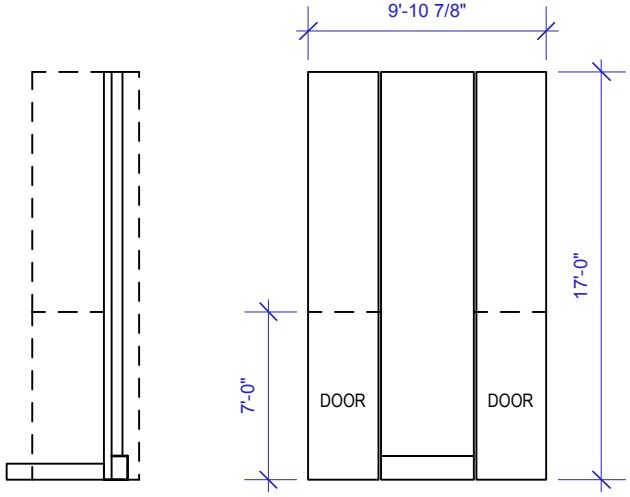

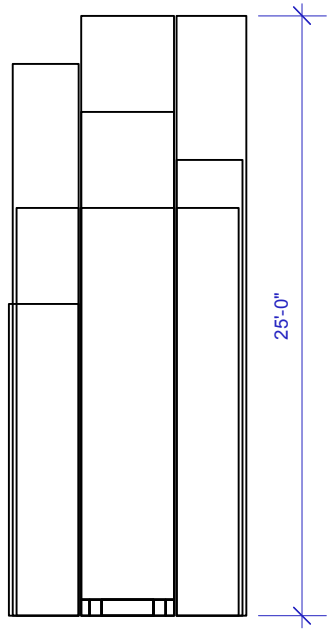

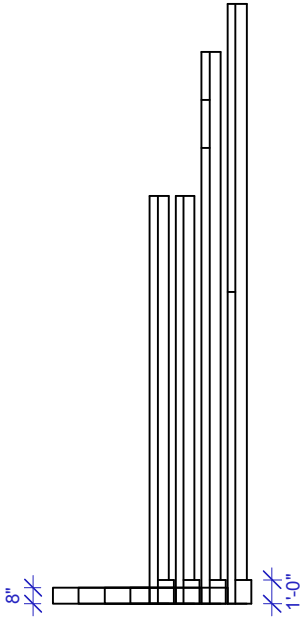

NOTES:

EIGHT TOWERS IN TOTAL, VARYING FROM 17' TO 25' IN HEIGHT. TOWERS NORMALLY STORE IN TWO STACKS OF FOUR, WITH ONE STACK IN EACH WING.

SEE STAGE PLAN FOR NORMAL STORAGE LOCATIONS.

VENUE:	ROYAL THEATRE, VICTORIA BC
CONTACT:	https://www.rmts.bc.ca 250-361-0800
DRAWING NO.	R-LTR-04
REVISION DATE:	2020-05-10
DRAWN BY:	TH
PAPER SIZE:	ANSI A (LETTER), A4
SCALE:	1/8" = 1'

the ROYAL & McPHERSON theatres society

DESCRIPTION:

ROYAL THEATRE
ORCHESTRA SHELL TOWERS
DIMENSIONS & DETAILS

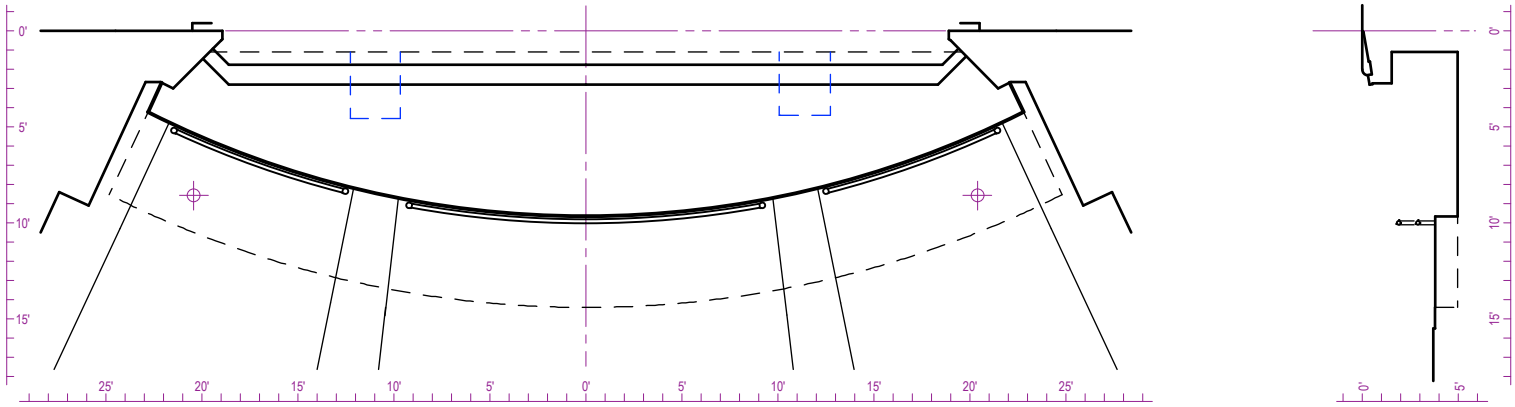

SMALL PIT (NORMAL CONFIGURATION)

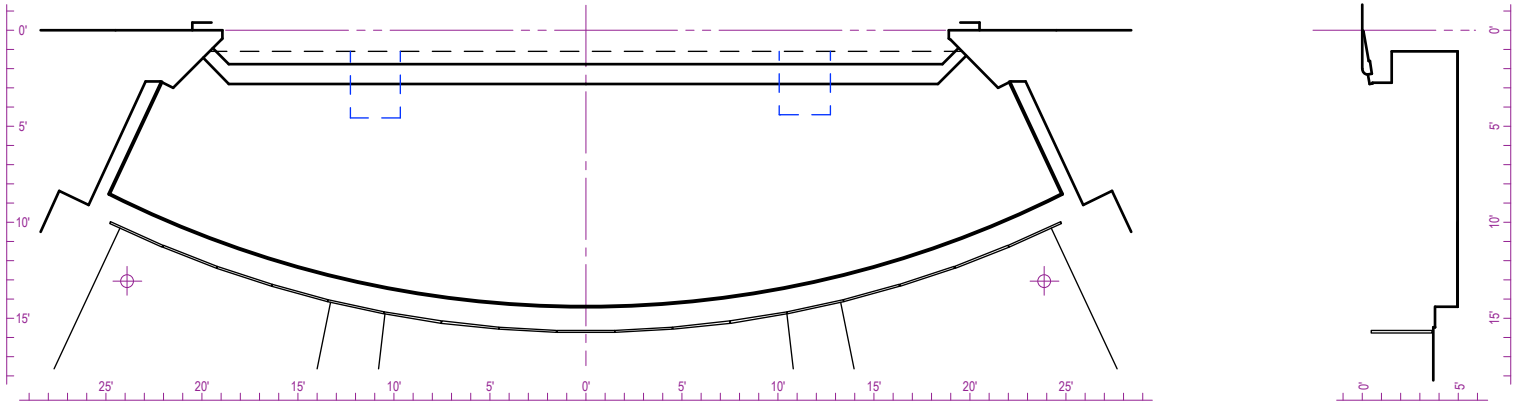

LARGE PIT (TWO SEATING ROWS AND RISERS REMOVED)

NOTES:

IMPORTANT:

– NOT SHOWN IS HOUSE P.A. NORMALLY LOCATED IN PIT
– CONTACT THEATRE WELL IN ADVANCE IF ORCHESTRA PIT IS TO BE USED IN EITHER CONFIGURATION.

VENUE:	ROYAL THEATRE, VICTORIA BC
CONTACT:	https://www.rmts.bc.ca 250-361-0800
DRAWING NO.	R-LTR-05
REVISION DATE:	2020-05-10
DRAWN BY:	TH
PAPER SIZE:	ANSI A (LETTER), A4
SCALE:	1" = 10'

the ROYAL & McPHERSON theatres society

DESCRIPTION:

ROYAL THEATRE ORCHESTRA PIT

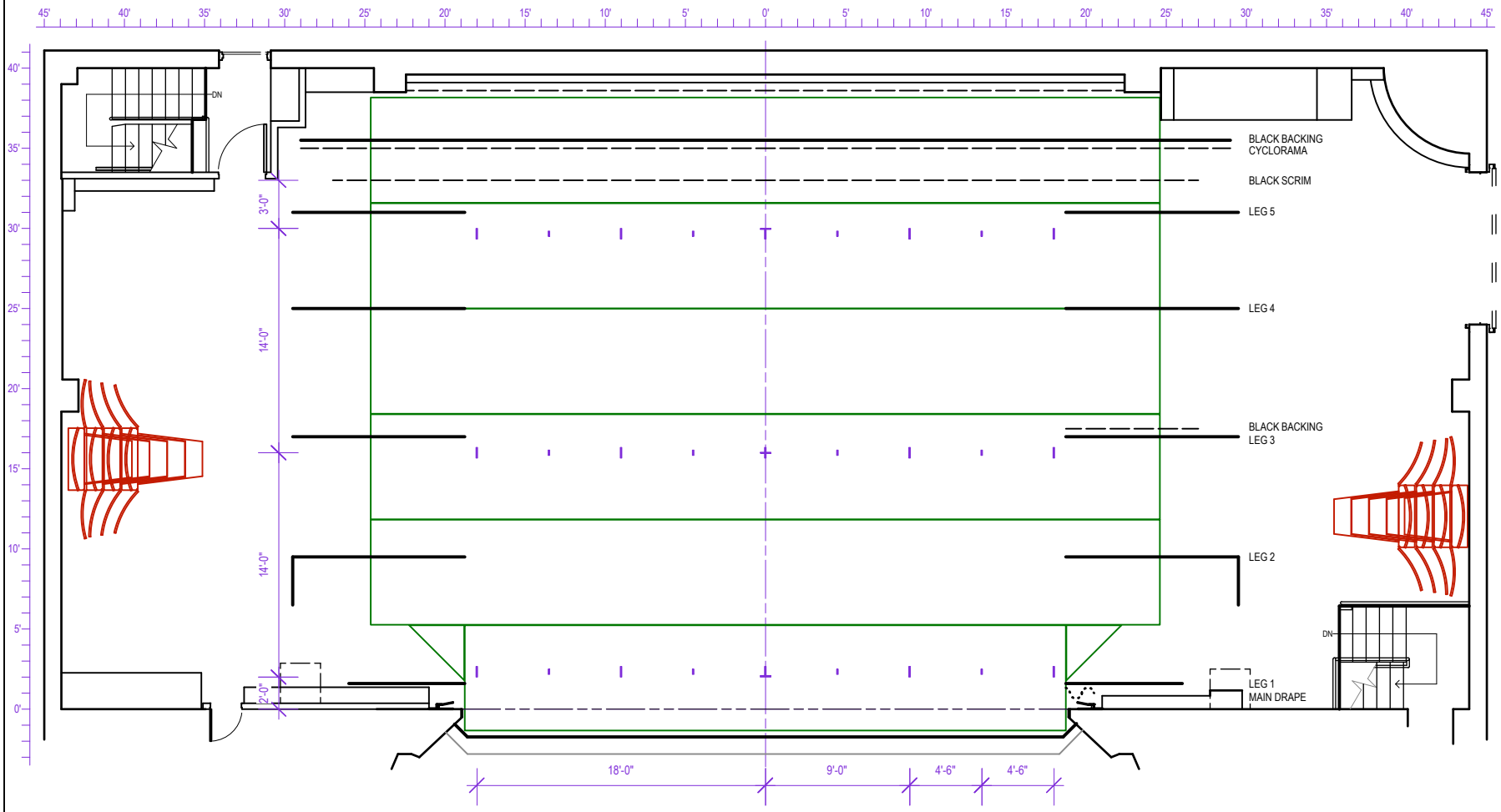

SUGGESTED T-LINE DIMENSIONS FOR DANCE RECITALS

NOTES:

HARLEQUIN 'CASCADE', 2 mm BLACK HEAVY-DUTY PVC
PANEL SIZE: 2 m x 15 m (78.7" x 49') LENGTH IS APPROXIMATE

SHOWN ARE RECOMMENDED T-LINE DIMENSIONS

VENUE:	ROYAL THEATRE, VICTORIA BC		
CONTACT:	https://www.rmts.bc.ca	250-361-0800	
DRAWING NO.	R-LTR-06	REVISION DATE: 2020-05-10	DRAWN BY: TH
PAPER SIZE:	ANSI A (LETTER), A4	SCALE:	1" = 10'

the ROYAL & McPHERSON theatres society

DESCRIPTION:

ROYAL THEATRE
HOUSE DANCE FLOOR & T-LINE

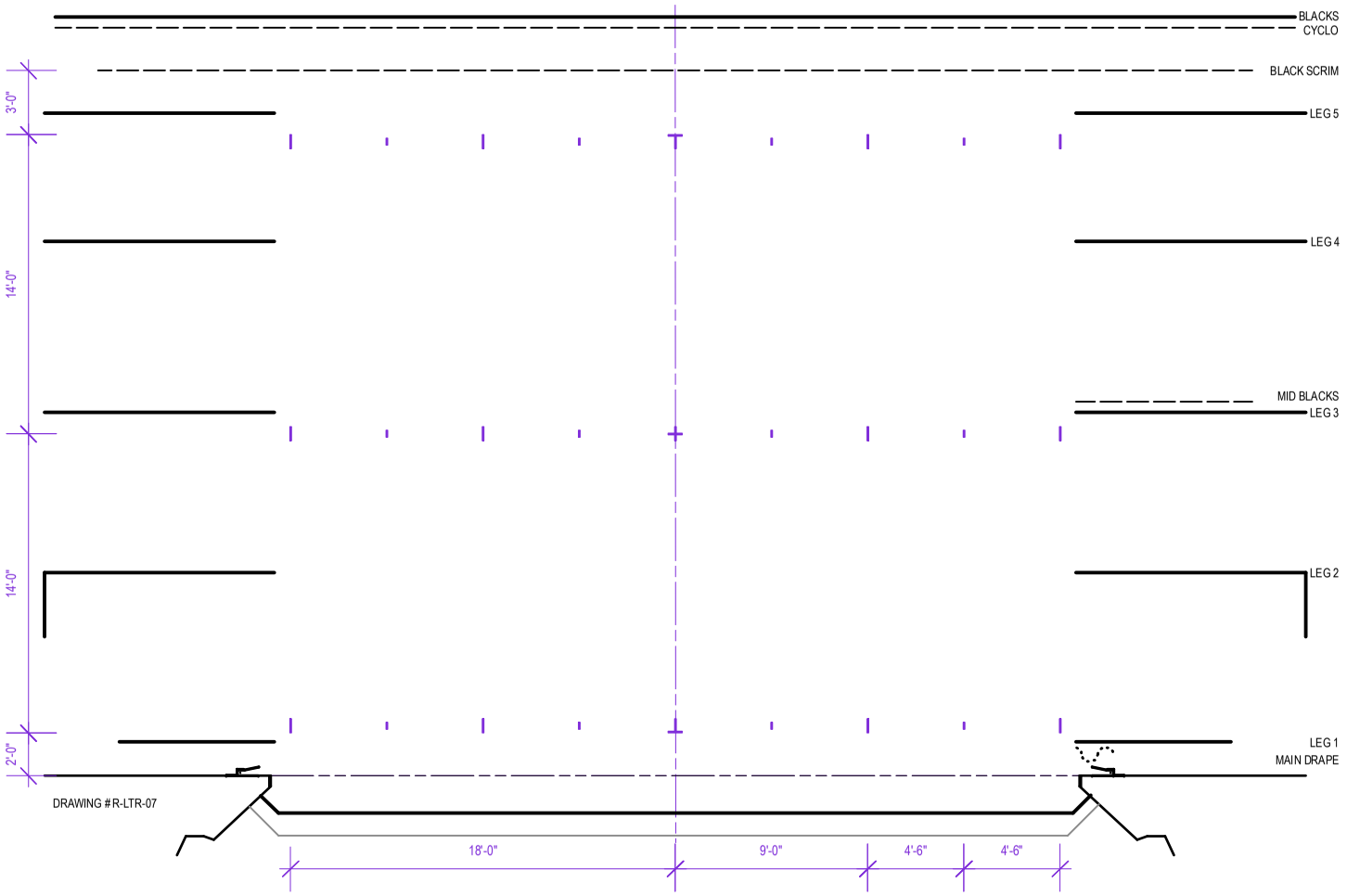
BLACKS
CYCLO
BLACK SCRIM
LEG 5
LEG 4
MID BLACKS
LEG 3
LEG 2
LEG 1
MAIN DRAPE
3'-0"
14'-0"
14'-0"
2'-0"
DRAWING # R-LTR-07
18'-0"
9'-0"
4'-6"
4'-6"

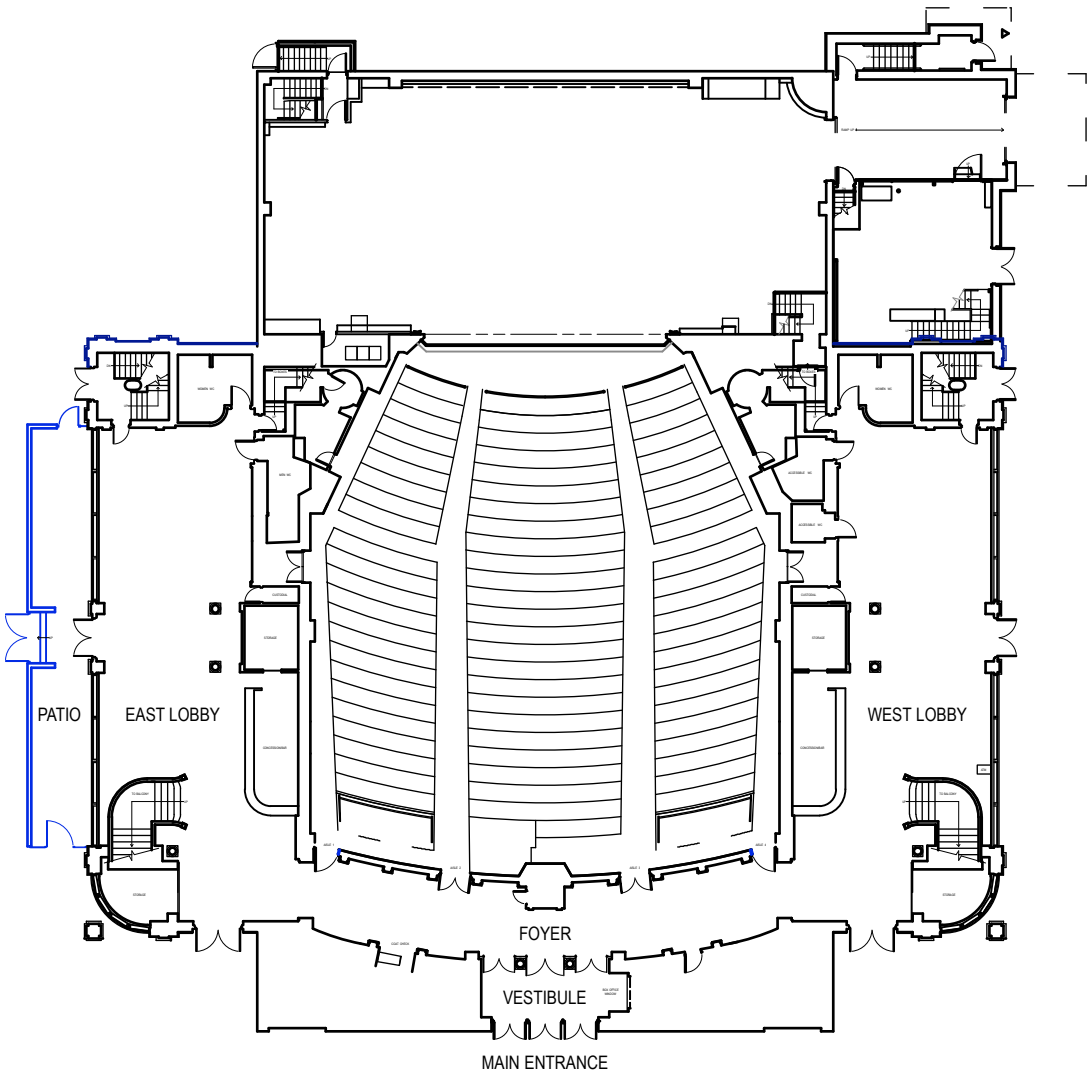

NOTES:	VENUE: ROYAL THEATRE, VICTORIA BC CONTACT: https://www.rmts.bc.ca 250-361-0800 DRAWING NO. R-LTR-21 REVISION DATE: 2020-05-10 DRAWN BY: TH PAPER SIZE: ANSI A (LETTER), A4 SCALE: 1" = 30'	the ROYAL & McPHERSON theatres society	DESCRIPTION: ROYAL THEATRE GROUND FLOOR PLAN

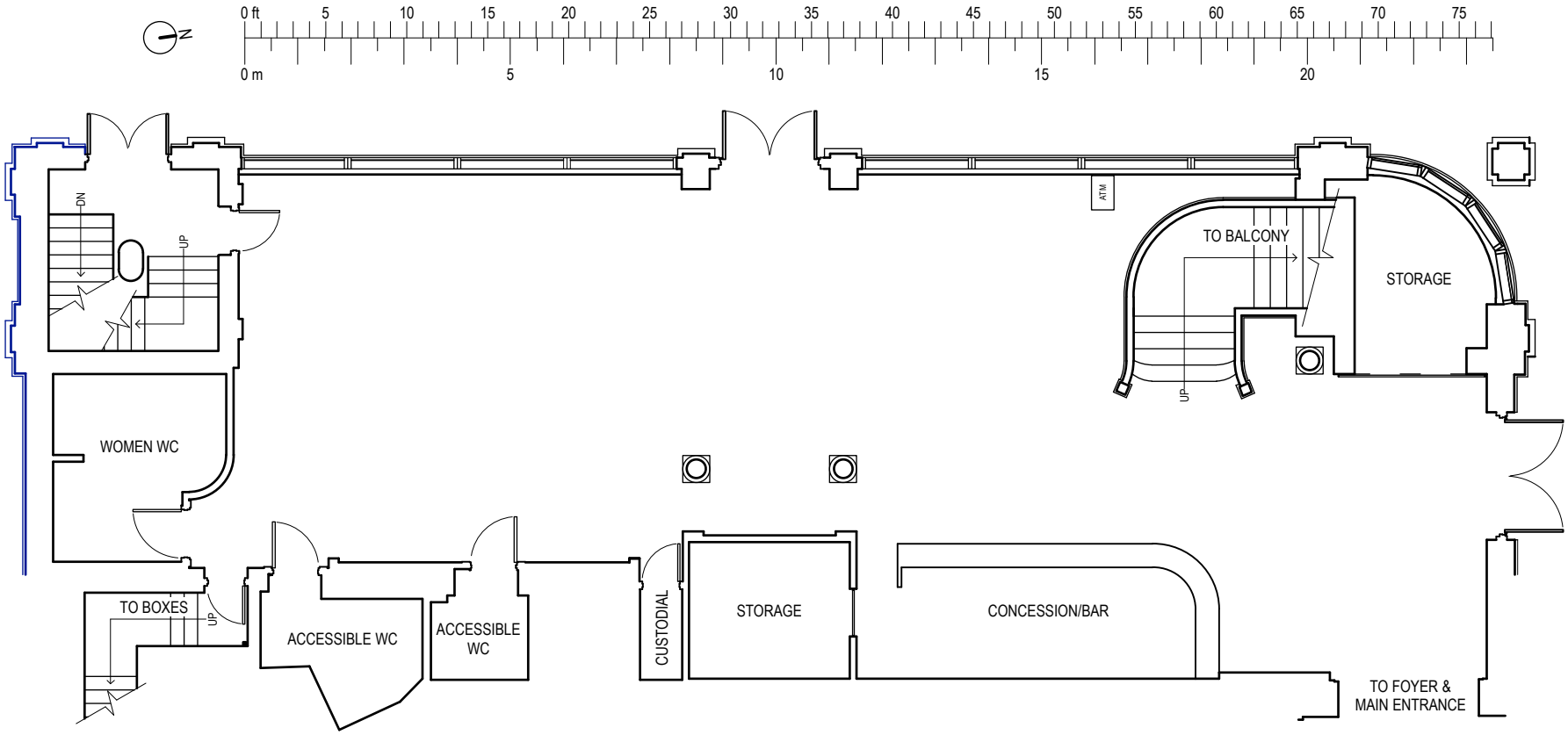

NOTES:

NOT SHOWN: FURNITURE, GRAND PIANO

VENUE:	ROYAL THEATRE, VICTORIA BC
CONTACT:	https://www.rmts.bc.ca 250-361-0800
DRAWING NO.	R-LTR-22
REVISION DATE:	2020-05-10
DRAWN BY:	TH
PAPER SIZE:	ANSI A (LETTER), A4
SCALE:	1:125

the ROYAL & McPHERSON theatres society

DESCRIPTION:

ROYAL THEATRE – WEST LOBBY
MAIN FLOOR PLAN

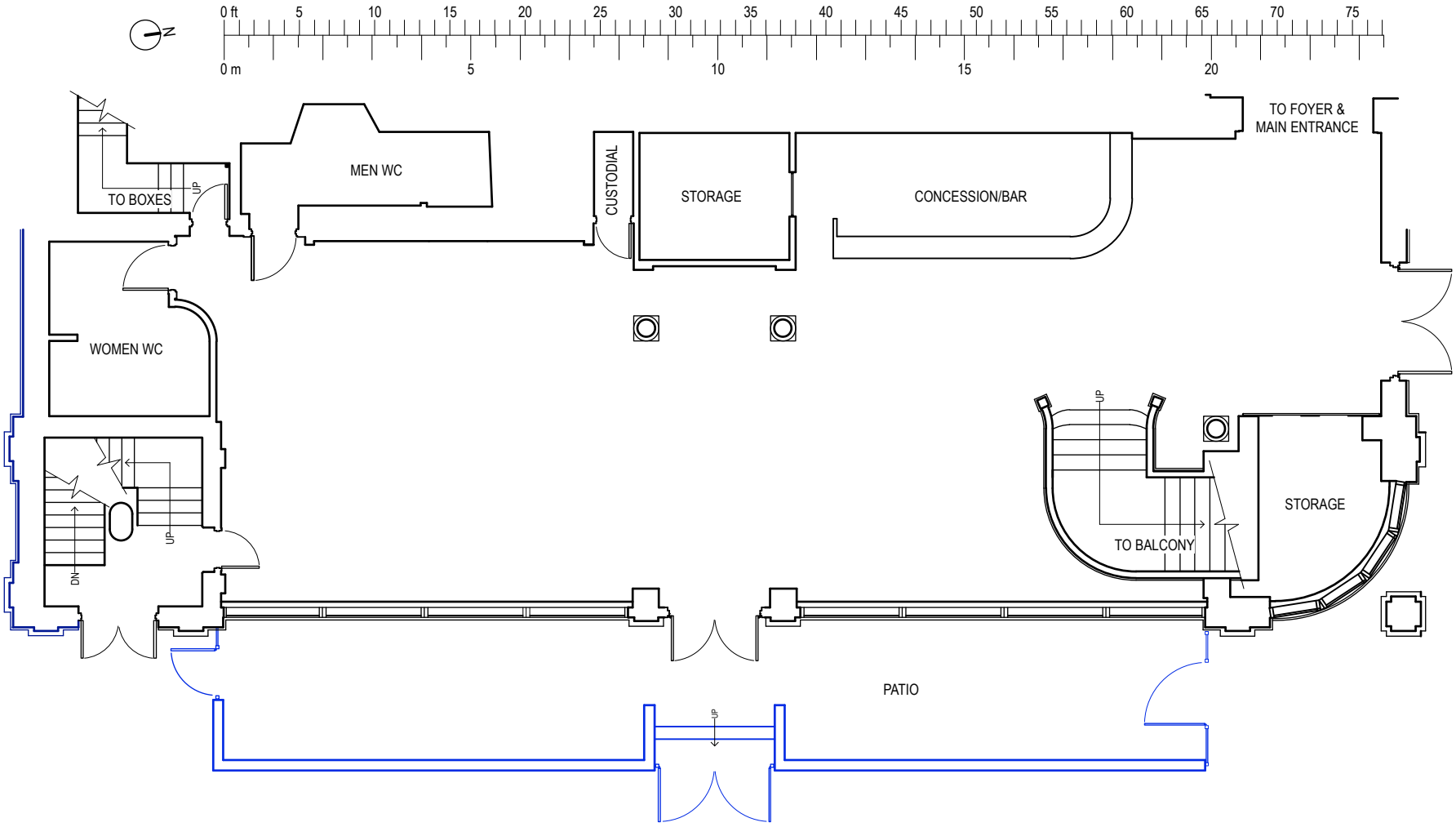

NOTES:

NOT SHOWN: FURNITURE, CRASH BAR

VENUE:	ROYAL THEATRE, VICTORIA BC
CONTACT:	https://www.rmts.bc.ca 250-361-0800
DRAWING NO.	R-LTR-23
REVISION DATE:	2020-05-10
DRAWN BY:	TH
PAPER SIZE:	ANSI A (LETTER), A4
SCALE:	1:125

the ROYAL & McPHERSON theatres society

DESCRIPTION:

ROYAL THEATRE – EAST LOBBY MAIN FLOOR PLAN

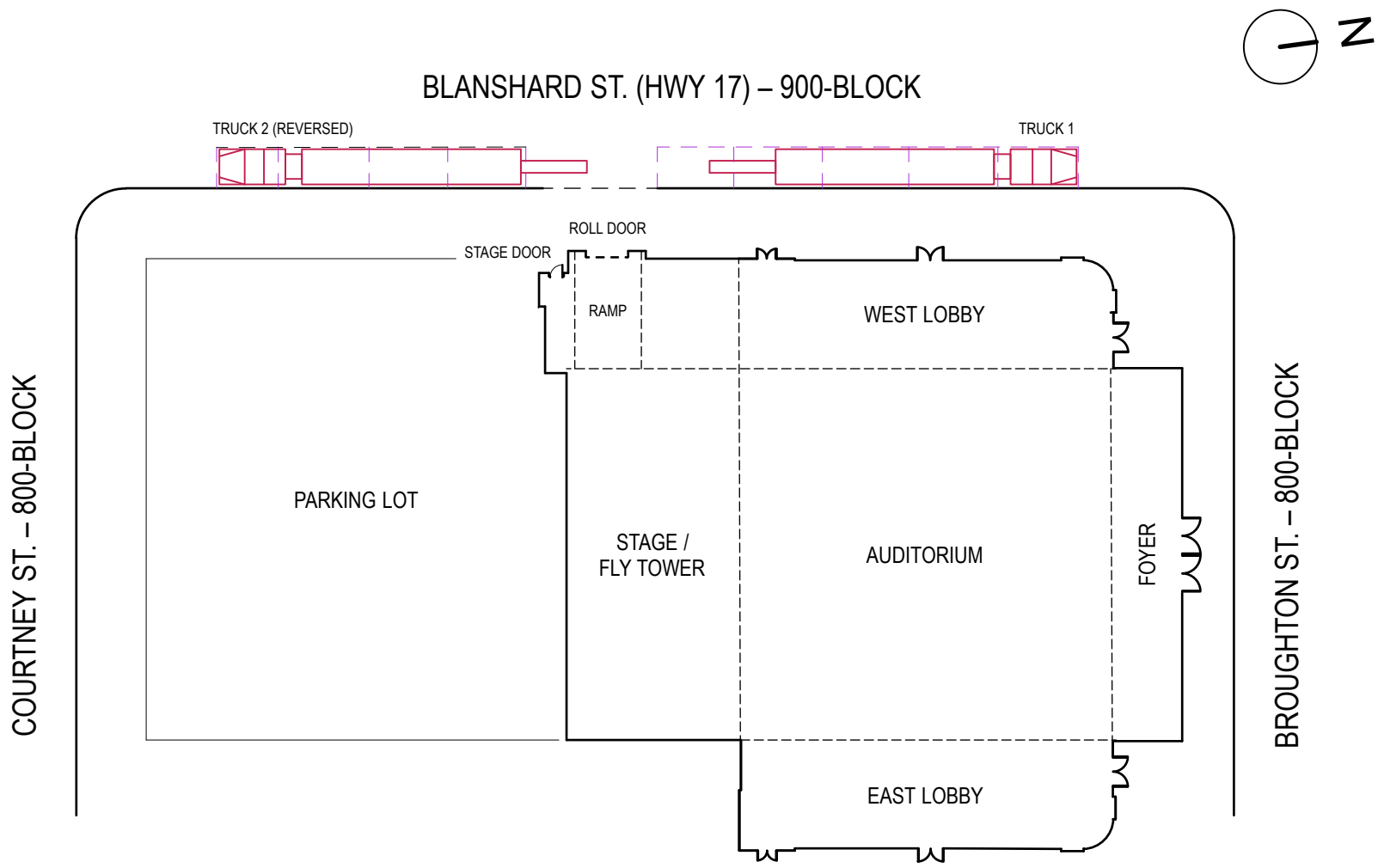

NOTES:

PERMIT REQUIRED. CONTACT VENUE WELL IN ADVANCE TO ARRANGE. N.B. SPECIAL PERMIT IS REQUIRED FOR REVERSE-PARKING.

UP TO 9 PARKING SPACES ARE AVAILABLE ON BLANSHARD ST., FOR PRODUCTION/TOUR VEHICLES ONLY

VENUE:	ROYAL THEATRE, VICTORIA BC		
CONTACT:	https://www.rmts.bc.ca	250-361-0800	
DRAWING NO.	R-LTR-31	REVISION DATE: 2020-05-10	DRAWN BY: TH
PAPER SIZE:	ANSI A (LETTER), A4	SCALE:	1" = 40'

the ROYAL & McPHERSON theatres society

DESCRIPTION:

ROYAL THEATRE
SITE PLAN – LOADING

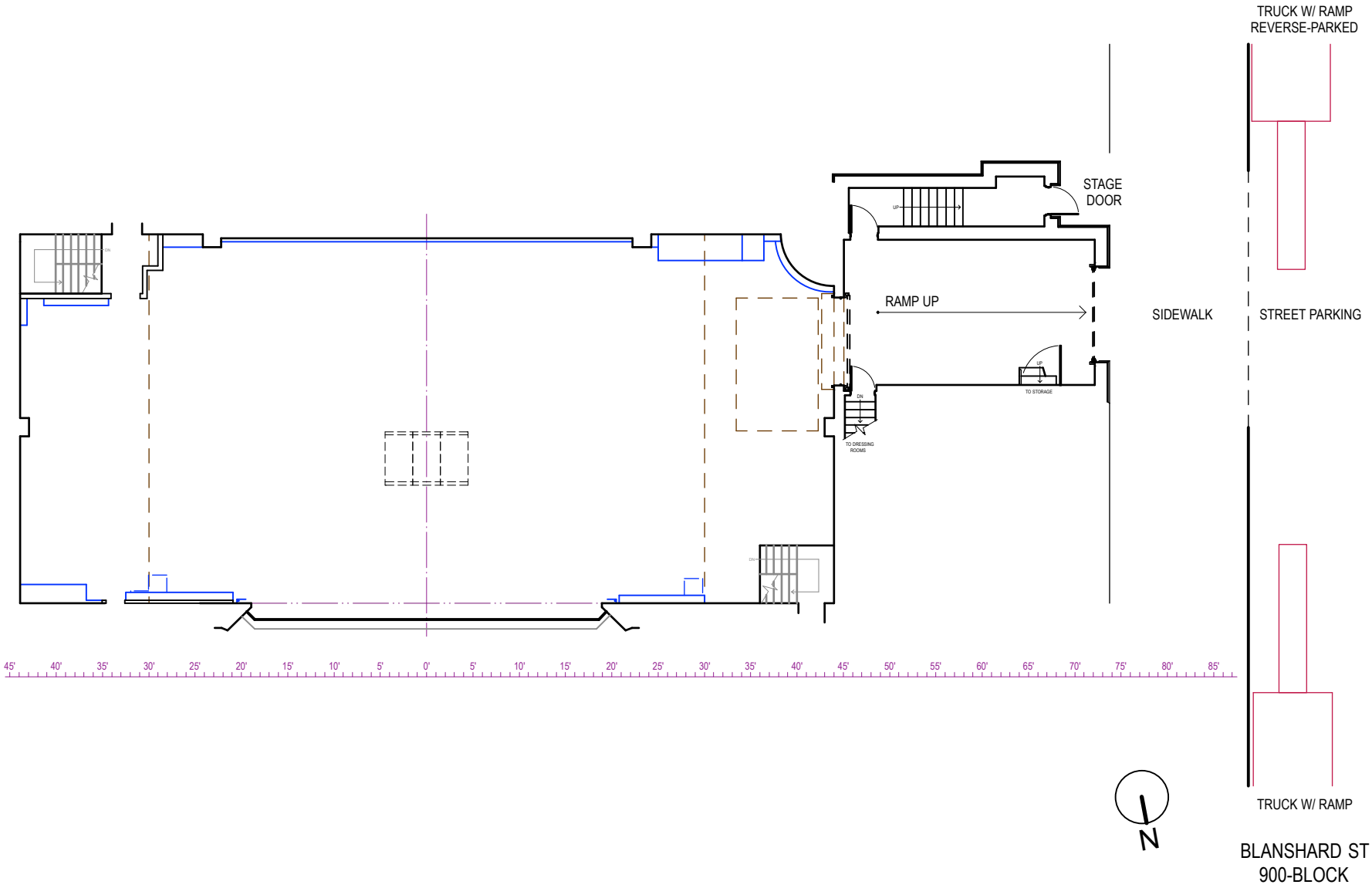

NOTES:

PERMIT REQUIRED. CONTACT VENUE WELL IN ADVANCE TO ARRANGE. N.B. SPECIAL PERMIT IS REQUIRED FOR REVERSE-PARKING.

UP TO 9 PARKING SPACES ARE AVAILABLE ON BLANSHARD ST., FOR PRODUCTION/TOUR VEHICLES ONLY

VENUE:	ROYAL THEATRE, VICTORIA BC
CONTACT:	https://www.rmts.bc.ca 250-361-0800
DRAWING NO.	R-LTR-32
REVISION DATE:	2020-05-10
DRAWN BY:	TH
PAPER SIZE:	ANSI A (LETTER), A4
SCALE:	1/16" = 1'

the ROYAL & McPHERSON theatres society

DESCRIPTION:

ROYAL THEATRE LOADING AREA PLAN VIEW

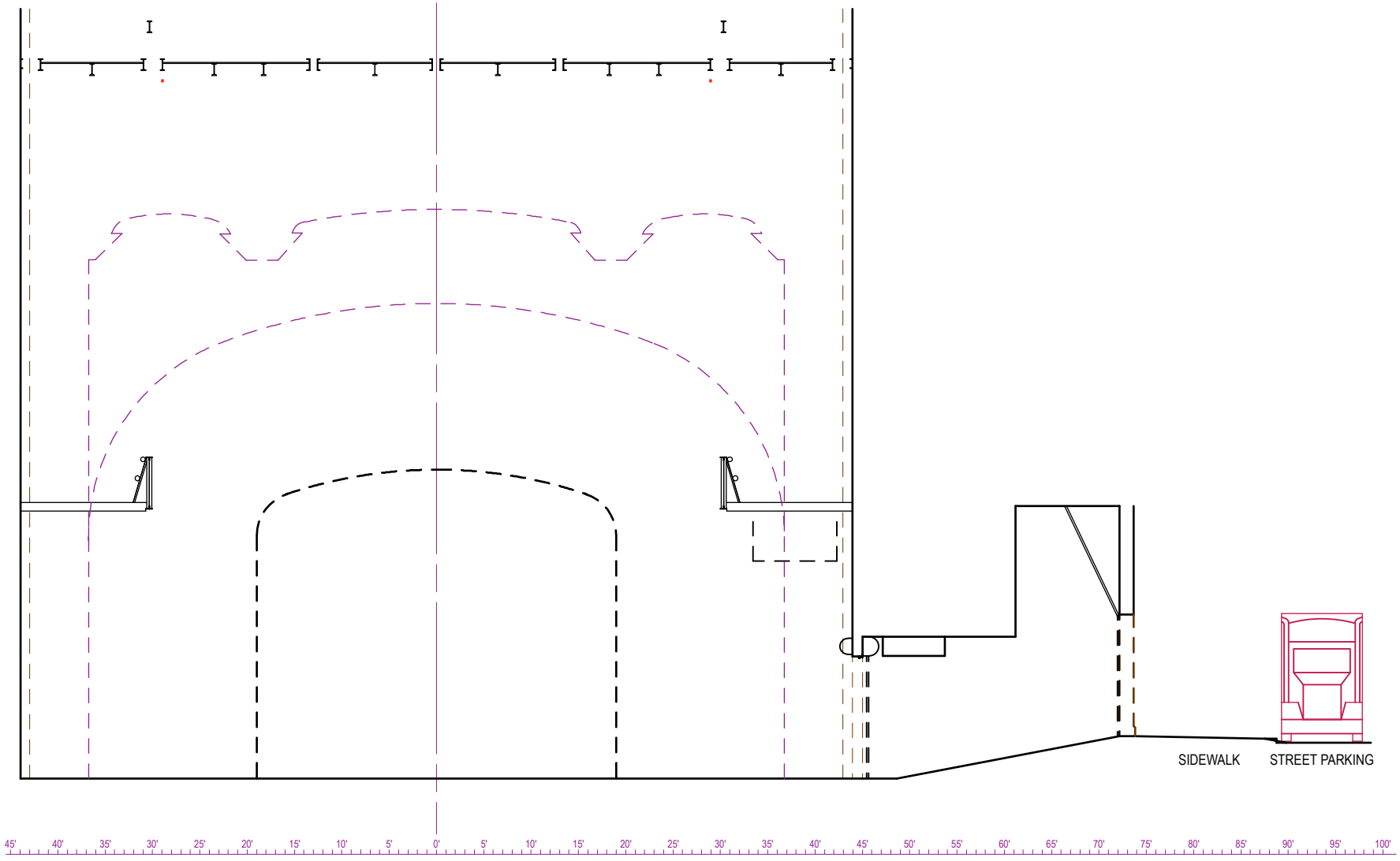

NOTES:

PERMIT REQUIRED. CONTACT VENUE WELL IN ADVANCE TO ARRANGE. N.B. SPECIAL PERMIT IS REQUIRED FOR REVERSE-PARKING.

UP TO 9 PARKING SPACES ARE AVAILABLE ON BLANSHARD ST., FOR PRODUCTION/TOUR VEHICLES ONLY

VENUE:	ROYAL THEATRE, VICTORIA BC		
CONTACT:	https://www.rmts.bc.ca	250-361-0800	
DRAWING NO.	R-LTR-33	REVISION DATE: 2020-05-10	DRAWN BY: TH
PAPER SIZE:	ANSI A (LETTER), A4	SCALE:	1/16" = 1'

the ROYAL & McPHERSON theatres society

DESCRIPTION:

ROYAL THEATRE LOADING AREA SECTION VIEW

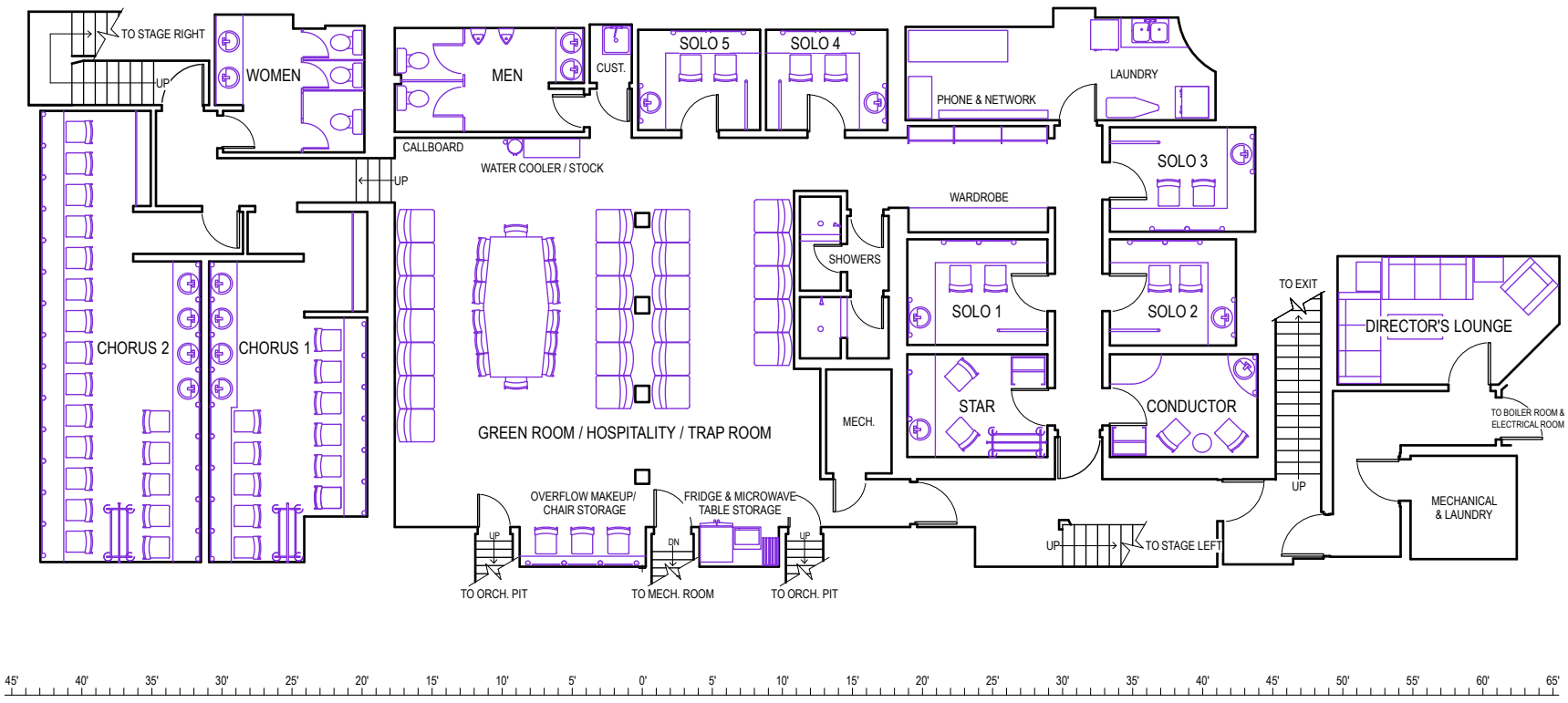

NOTES:

VENUE: ROYAL THEATRE, VICTORIA BC

CONTACT: https://www.rmts.bc.ca 250-361-0800

DRAWING NO. R-LTR-41 | REVISION DATE: 2020-05-10 | DRAWN BY: TH

PAPER SIZE: ANSI A (LETTER), A4 | SCALE: 1:150

the ROYAL & McPHERSON theatres society

DESCRIPTION:

ROYAL THEATRE DRESSING ROOMS

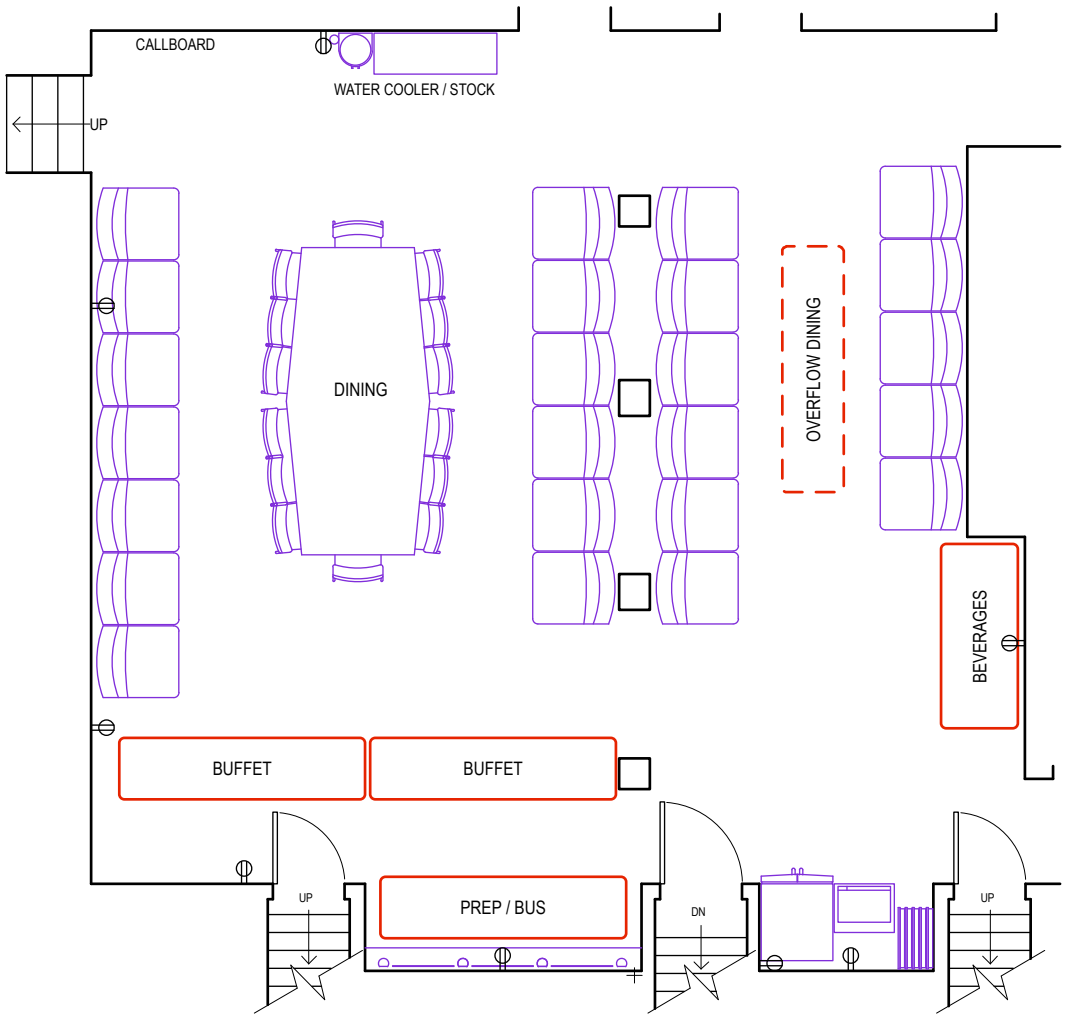

NOTES:

SUGGESTED ARRANGEMENT OF GREEN ROOM
FOR CATERED MEAL SERVICE

BASEBOARD RECEPTACLES

VENUE: ROYAL THEATRE, VICTORIA BC

CONTACT: https://www.rmts.bc.ca 250-361-0800

DRAWING NO. R-LTR-42 | REVISION DATE: 2020-05-10 | DRAWN BY: TH

PAPER SIZE: ANSI A (LETTER), A4 | SCALE: 1:75

the ROYAL & McPHERSON theatres society

DESCRIPTION:

ROYAL THEATRE GREEN ROOM CATERING SET-UP